Verbatim LED Square Downlight 220mm 21W 4000K 2200lm White DIM

- Energy saving alternative to CFL downlights
- 50,000 hours lifetime (L70B50)
- Direct mains voltage connection (220-240V)
- Light output of 2200lm
- 4000K neutral white light
- Cut-out dimensions: 202 x 202mm
- Flicker-free
- Phase-cut dimmable driver included
- 5 Years Warranty







Product Number	**52982**
General Data	
Installation type	Recessed
Housing material	Aluminum
Housing colour	White (RAL9010)
Protection class	IP20 (IP40 room side)
Dimmable	yes
Geometric Data	
Length (mm)	220
Height (mm)	67
Width (mm)	220
Weight (g)	810
Cut-out dimensions (mm)	202 x 202
Electric Data	
Wattage (W)	21
Voltage (V)	220-240
Current (mA)	80
Power Factor	0.92
Operating Frequency (Hz)	50/60
Safety Class	Class II
Power supply	External
Photometric Data	
Luminous Flux (lm)	2200
CRI	80
CCT (K)	4000
Luminous Efficacy (lm/W)	105
Lifespan	
Lifetime (hrs)	50,000 (L70B50)
Switching Cycle	100,000
Mechanical Parameters	
Glow wire test	850°C

Product image



Technical drawing

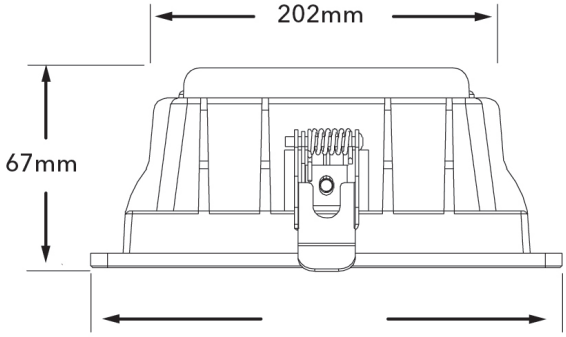

Application image



Energy Rating

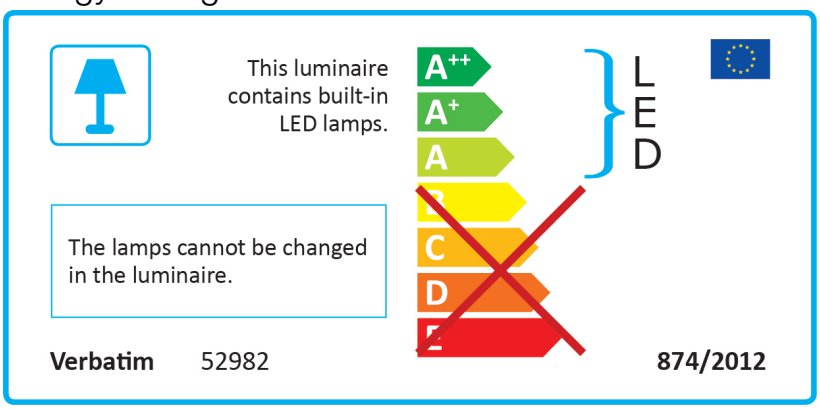

Technical Packaging Details

Barcode
023942529828

EAN 128
(02)00023942529828(37)09(91)52

EAN 14
50023942529823

Pack Dimensions(HxWxL)
255 x 245 x 80 (mm)

Pack Weight
1051 (g)

MOQ
1

Carton Dimensions (HxWxL)
755 x 270 x 270 (mm)

Cartons/Pallet
12

Layers/Pallet
3

Units/Pallet
108

Photometric Diagrams

